CASEMENT

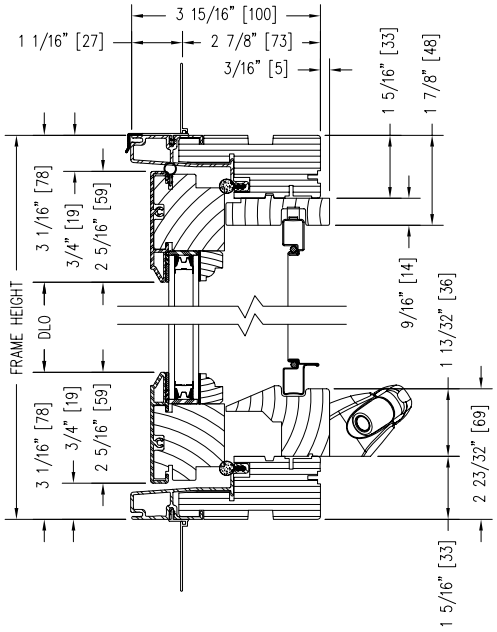

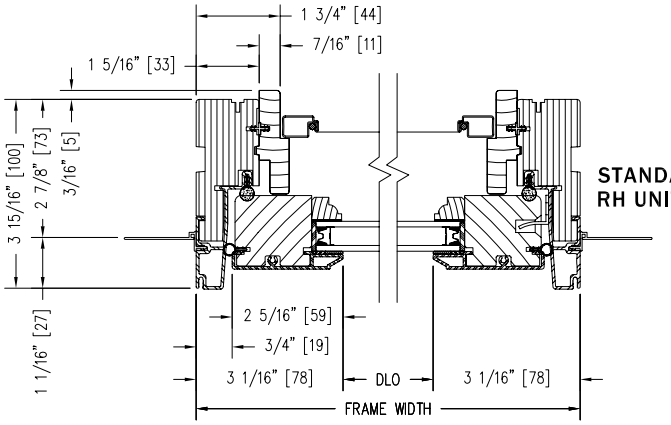

STANDARD HINGE
RH UNIT SHOWN

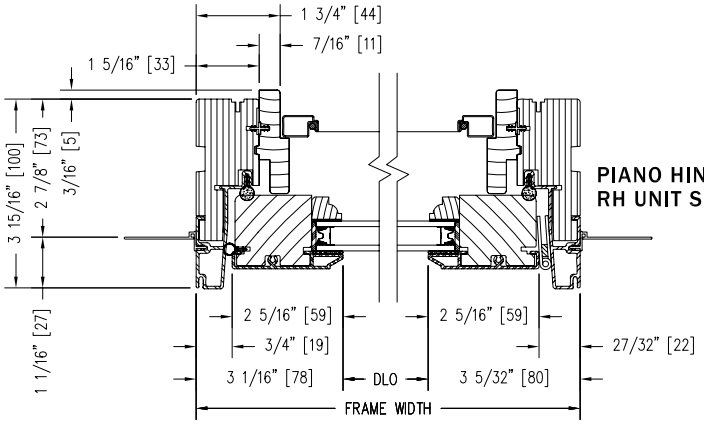

PIANO HINGE
RH UNIT SHOWN

Notes:

Dynamically configure section details to your specific needs by going to EagleWindow.com, select WIntelligence.
Eagle Window & Door reserves the right to change the specifications without notice.

DRAWING # AD3000
SCALE: 3"=1'-0"
REVISON: 2/2/09

Eagle WINDOWS DOORS an Andersen Company